Long Jaw Vernier Caliper
SERIES 534

- Long jaws for measuring hard-to-reach workpiece features. Suitable for measuring outside diameter of workpieces such as large pipes or spherical objects.
- Inside and outside measurements can be read directly from the upper and lower slider graduations respectively.

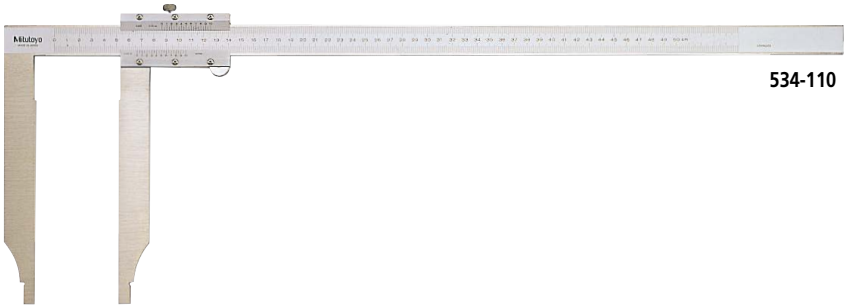

534-110

SPECIFICATIONS

Metric with inside measurement Vernier scale

Code No.	Range (mm)*1	Graduation (mm)	Maximum permissible error (mm)*2		Remarks
			E_{MPE}	S_{MPE}	
534-109	0 (10.1) - 300	0.05	±0.07	±0.07	without fine adjustment
534-110	0 (20.1) - 500		±0.13	±0.13	

*1 ( ): Minimum dimension in ID measurement
*2 The Partial Surface Contact Error (E_{MPE}) and Shift Error (S_{MPE}) are terms defined by ISO 13385-1:2019.

Metric/Inch with metric/inch double scale

Code No.	Range*1	Graduation	Maximum permissible error*2		Remarks
			E_{MPE}	S_{MPE}	
534-101	0 - 300 mm/0 - 12 in (10.1 - 300 mm/0.398 - 12 in)	0.05 mm/ 1/128 in	±0.07 mm/ ±0.5/128 in	±0.07 mm/ ±0.5/128 in	+10 mm/0.394 in to reading in inside measurement without fine adjustment
534-105	0 - 300 mm/0 -12 in (10.1 - 300 mm/0.398 - 12 in)	0.02 mm/ 0.001 in	±0.04 mm/ ±0.0015 in	±0.04 mm/ ±0.0015 in	
534-102	0 - 500 mm/0 - 20 in (20.1 - 500 mm/0.791 - 20 in)	0.05 mm/ 1/128 in	±0.13 mm/ ±0.5/128 in	±0.13 mm/ ±0.5/128 in	+20 mm/0.787 in to reading in inside measurement without fine adjustment
534-106		0.02 mm/ 0.001 in	±0.06 mm/ ±0.0025 in	±0.06 mm/ ±0.0025 in	
534-103	0 - 750 mm/0 - 30 in (20.1 - 750 mm/0.791 - 30 in)	0.05 mm/ 1/128 in	±0.16 mm/ ±1/128 in	±0.16 mm/ ±1/128 in	
534-107		0.02 mm/ 0.001 in	±0.08 mm/ ±0.003 in	±0.08 mm/ ±0.003 in	
534-104	0 - 1000 mm/0 - 40 in (20.1 - 1000 mm/0.791 - 40 in)	0.05 mm/ 1/128 in	±0.2 mm/ ±1/128 in	±0.2 mm/ ±1/128 in	
534-108		0.02 mm/ 0.001 in	±0.1 mm/ ±0.004 in	±0.1 mm/ ±0.004 in	

*1 ( ): Minimum dimension in ID measurement
*2 The Partial Surface Contact Error (E_{MPE}) and Shift Error (S_{MPE}) are terms defined by ISO 13385-1:2019.
Note: For external dimensions, refer to page 04-28.

NPOWER
Powered by NaviTech
Tài liệu được tổng hợp bởi đội ngũ kỹ thuật của **NPOWER**
Bản quyền nội dung thuộc về **Mitutoyo**
Powered by **NAVITECH** | www.navitech.co
www.npower.com.vn

Mitutoyo reserves the right to change any or all aspects of any product specification, including prices, designs and service content, without notice.

Long Jaw Vernier Caliper
SERIES 534

Measurement example

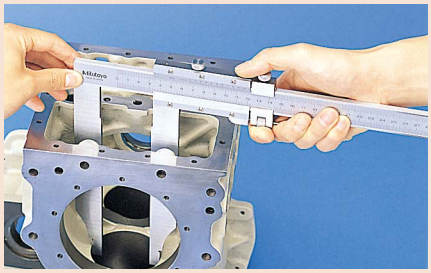

- Long jaws for measuring hard-to-reach workpiece features. Suitable for measuring outside diameter of workpieces such as large pipes or spherical objects.
- Inside and outside measurements can be read directly from the upper and lower slider graduations respectively.
- Fine adjustment for more accurate measurement.

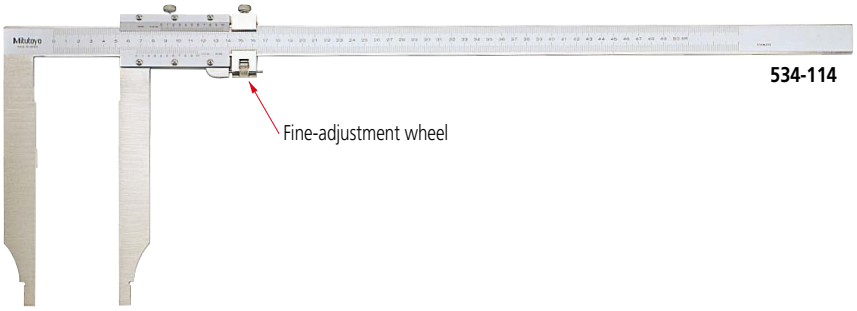

534-114

SPECIFICATIONS

Metric with inside measurement Vernier scale

Code No.	Range (mm)*1	Graduation (mm)	Maximum permissible error (mm)*2		Remarks
			E_{MPE}	S_{MPE}	
534-113	0 (10.1) - 300	0.02	±0.04	±0.04	with fine adjustment
534-114	0 (20.1) - 500		±0.06	±0.06	
534-115	0 (20.1) - 750		±0.08	±0.08	
534-116	0 (20.1) - 1000		±0.10	±0.10	

*1 ( ): Minimum dimension in ID measurement
*2 The Partial Surface Contact Error (E_{MPE}) and Shift Error (S_{MPE}) are terms defined by ISO 13385-1:2019.

Inch with inside measurement Vernier scale

Code No.	Range (in)*1	Graduation (in)	Maximum permissible error (in)*2		Remarks
			E_{MPE}	S_{MPE}	
534-117	0 (0.304) - 12	0.001	±0.0015	±0.0015	with fine adjustment
534-118	0 (0.804) - 20		±0.0025	±0.0025	
534-119	0 (0.804) - 30		±0.003	±0.003	
534-120	0 (0.804) - 40		±0.004	±0.004	

*1 ( ): Minimum dimension in ID measurement
*2 The Partial Surface Contact Error (E_{MPE}) and Shift Error (S_{MPE}) are terms defined by ISO 13385-1:2019.

DIMENSIONS

Unit: mm

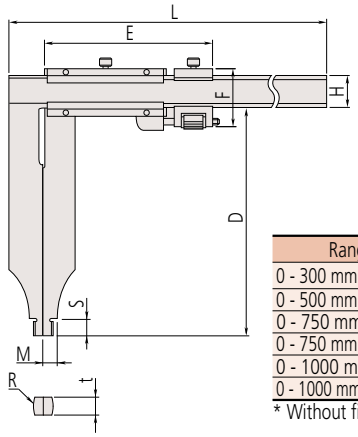

Range	D	E	F	H	L	M	R	S	t
0 - 300 mm/0 - 12 in	90	103	38	20	445	7	R5	12	3.8
0 - 500 mm/0 - 20 in	200	112	51	25	682	12	R10	18.5	6
0 - 750 mm*		150	—	32	995				
0 - 750 mm/0 - 30 in			62.5						8
0 - 1000 mm*			—		1230				
0 - 1000 mm/0 - 40 in			62.5						

* Without fine adjustment

NPOWER
Powered by NaviTech
Tài liệu được tổng hợp bởi đội ngũ kỹ thuật của **NPOWER**
Bản quyền nội dung thuộc về **Mitutoyo**
Powered by **NAVITECH** | www.navitech.co
www.npower.com.vn